Revision:	Changes:	Date:
1.0	Initial Case, PCN: RVD002-107	2026.11.18

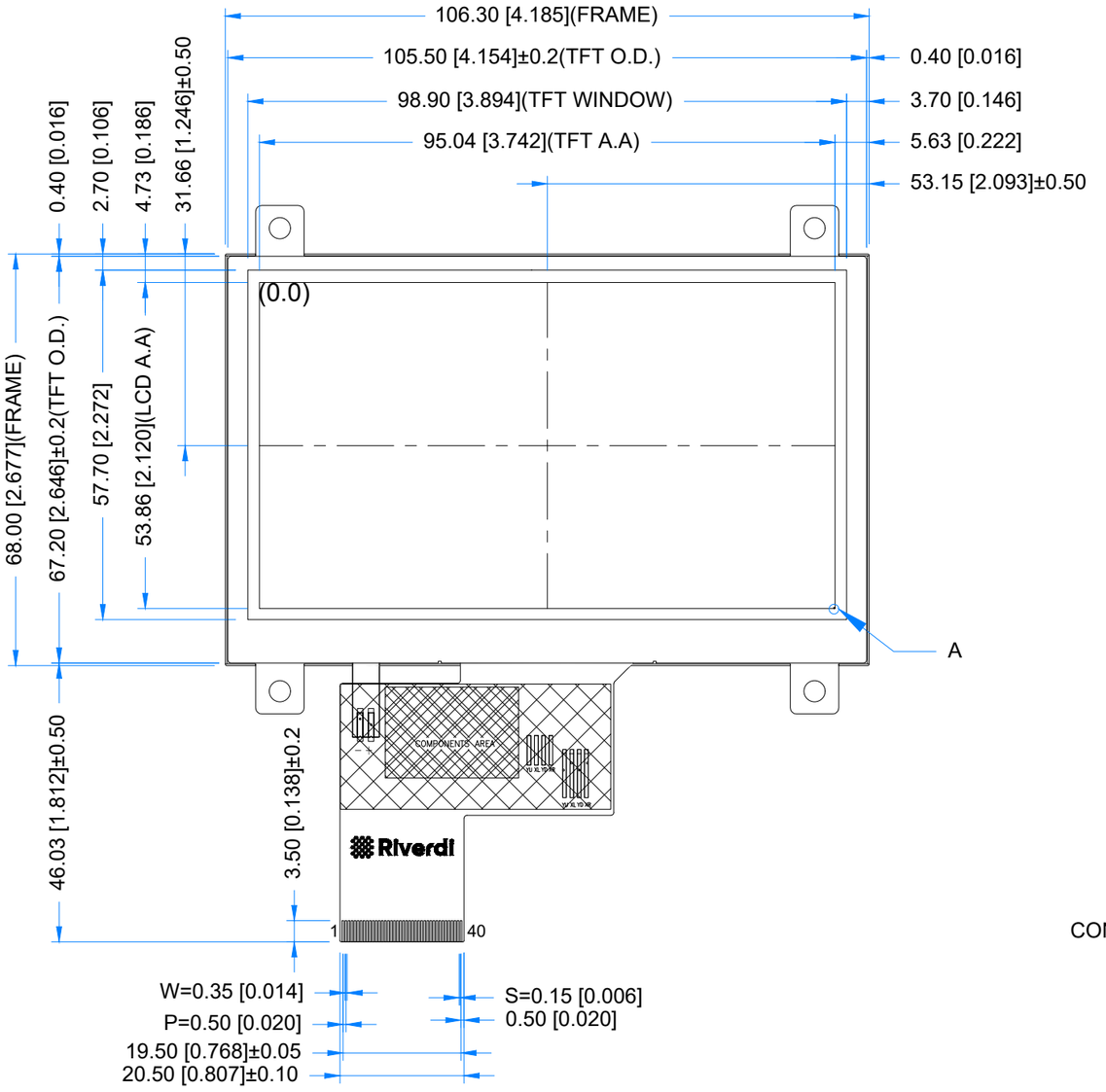

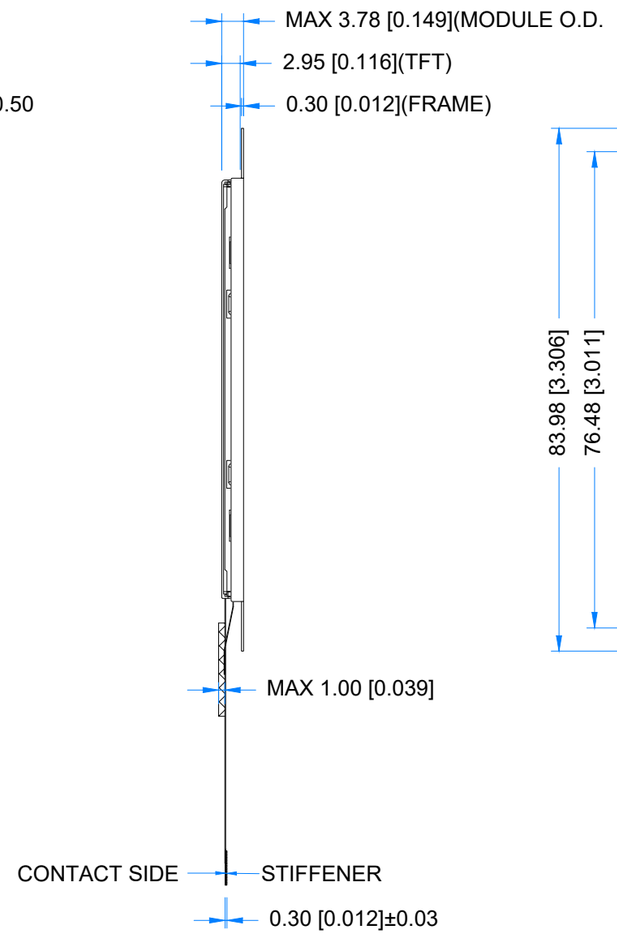

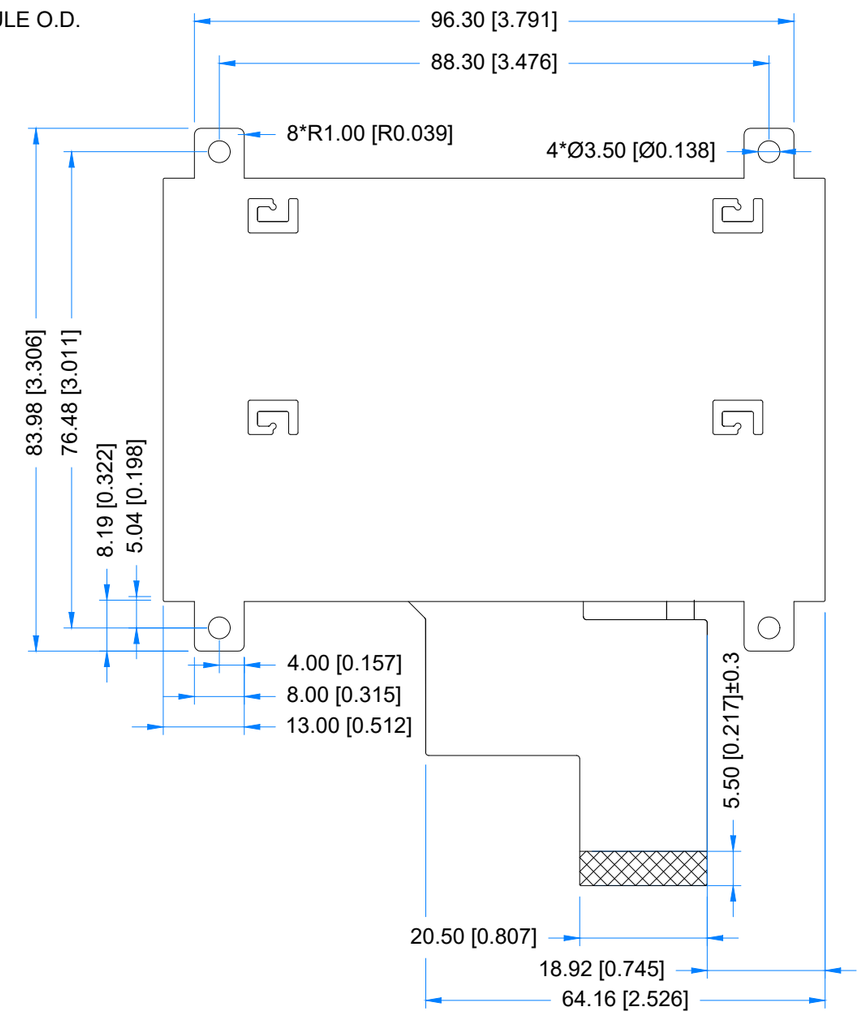

PINOUT ON THE 2ND PAGE

TFT NOTES:
1. DISPLAY TYPE: TRANSMISSIVE, NORMALLY WHITE
2. RESOLUTION: 480x272
3. VIEWING ANGLE: 12 O'CLOCK
4. INTERFACE: RGB
5. DRIVER IC: ST7282P
6. OPERATING VOLTAGE: 3.3V
7. BACKLIGHT: WHITE LED, If=40mA, Vf=14V~17V

GENERAL NOTES:
1. SURFACE LUMINANCE: 550cd/m^2
2. OPERATING TEMPERATURE: -20°C ~ 70°C
3. STORAGE TEMPERATURE: -30°C ~ 80°C
4. WITHOUT INDIVIDUAL TOLERANCE: ±0.3mm
5. RoHS COMPLIANT

PN: RVT4.3A480272TFWN00 V4				Riverdi
SN:				
DRAWN:	M.Stabinski	2026.11.18	1:0.99	
CHECKED:	M.Wierzbowski	2026.11.18	[mm]	
APPR:	M.Wierzbowski	2026.11.18	ISO A3	P. 1 of 1

LCD CONNECTOR			
Pin No.	Desc.	Pin No.	Desc.
1	LEDK	21	B0
2	LEDA	22	B1
3	GND	23	B2
4	VDD	24	B3
5	R0	25	B4
6	R1	26	B5
7	R2	27	B6
8	R3	28	B7
9	R4	29	GND
10	R5	30	PCLK
11	R6	31	DISP
12	R7	32	HSYNC
13	G0	33	VSYNC
14	G1	34	DE
15	G2	35	NC
16	G3	36	GND
17	G4	37	NC(XR)
18	G5	38	NC(YD)
19	G6	39	NC(XL)
20	G7	40	NC(YU)